www.snwvalves.com

BALL VALVE

INCLUDING FLOATING & TRUNNION MOUNTED TYPE

The enterprise which advance
on the world with technique of best

S&W IND Co., Ltd.

The enterprise which
on the world with

S&W has made great progress with not only Korean customers but also many worldwide of customers for years. We have been always with customers.
Our first and final goal is to manufacture world best of check valves and supply to worldwide variety necessary as, power plants, sea water service, ultra low temperature plant, LNG, shipment buildings etc.
Check valves will be certainly with S&W in world market.
Thank you very much!

CEO Min Kyu, Kim

advance technique of best

Contents

04 **Floating Ball Valves -** Structure Properties

06 **Floating Ball Valves -** Side Entry Design , One Piece Body (SWFS1)

08 **Floating Ball Valves -** Side Entry Design , Two Piece Body (SWFS2)

10 **Floating Ball Valves -** Side Entry Design , Tree Piece Body (SWFS3)

12 **Floating Ball Valves -** Structure Properties

13 **Floating Ball Valves -** Top Entry Design , One Piece Body (SWFT1)

15 **Trunnion Mounted Ball Valves -** Structure Properties

16 **Trunnion Mounted Ball Valves -** Side Entry Design , Two Piece Body (SWTS2)

18 **Trunnion Mounted Ball Valves -** Side Entry Design , Three Piece Body (SWTS3)

24 **Trunnion Mounted Ball Valves -** Top Entry Design , One Piece Body (SWTT1)

30 **Technical Data -** Steel Pipe Flange And Bolting Dimensions

32 **Technical Data -** Butt Welding End Details

34 **Technical Data -** Addreviations List

35 **Ordering Guide**

The material in this Cataloge is only for general information. For specific performance date and proper material selection, consult factory and your S&W's reperensitive. Although every attempt has been made to ensure that the information contained in this cataloge is correct S&W. reserves the right to change design, materials and specification without notice

FLOATING BALL VALVES

Structure Properties

1. Reliable Seat Seal

Design Features Reliable Seat Seal

The structure design of double-beveled sealing ring has been adopted to reduce the friction between the ball and the sealing ring to achieve lower operation torque. When the medium pressure is low, the ball has smaller contacting surface with sealing ring, which introduces higher sealing pressure to ensure the sealing reliability. When the medium pressure gets higher, the contacting area between ball and sealing ring increases accordingly. Larger contact area reduces the sealing pressure to avoid the deformation of sealing ring.

At Lower Medium Pressure

At Higher Medium Pressure

2. Fire Safety Design

Fire Safe Seating

In case PTFE seats are decomposed due to prolonged exposure to extremely high temperatures in fire accident, the edge of the floating seal retainer come into metal to metal contact with the ball to shut off the fluid and minimize internal fluid leakage through the valve bore to stop the flow of hazardous on flammable fluids until a new seal is installed.

Fire Safe Design Of Stem

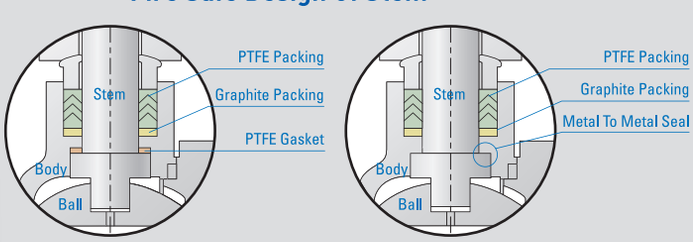

Before Fire

After Fire

Fire Safe Design Of Seat

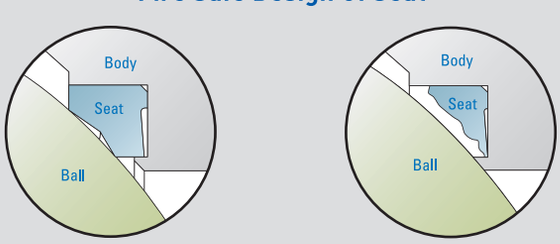

Before Fire

After Fire

Fire Safe Design Of Valve Body And Bonnet Flanges

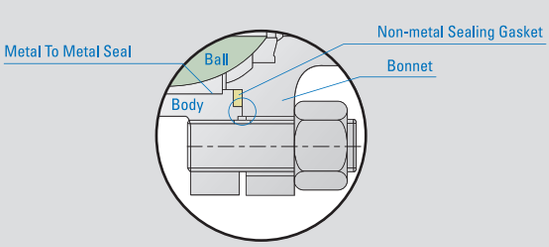

3. Blow - Out Proof Stem

An internal entry anti-blow out stem maintains maximum operating safely at high operating pressure. The integral flange also functions as the back seat to ensure stem sealing. Self adjusting stem packing assembly compensates for temperature fluctuations and is secured by a lock. Washer (Fig.1)

4. Anti - Static Design

An integral Anti-Static Design provided by mean of spring-loaded devices which maintain contact between ball and stem,and stem and body to ensure electrical continuity, assuring stem sealing and Tested to BS 5351 and BS 5146. (Fig. 2)

5. Live Loaded Gland Flange

Live loading is designed to provide gland load retention, compensating for expected in-service consolidation of the packing. A set of Belleville-Spring Washers are used on each gland stud to help exert a continuous compressive force on the gland flange and therefore fugitive emissions from the stem packing. (Fig. 3)

6. Locking Device

Facility for mounting a locking device for prevention of accidental valve operation is provided upon customer request. Stop limiting device is standard. (Fig. 4)

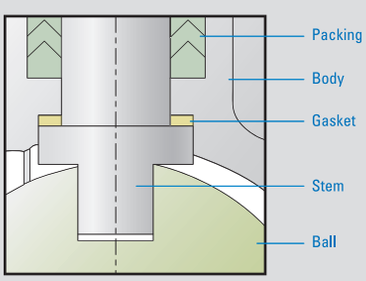

Fig. 1

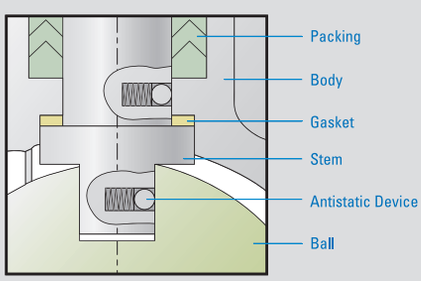

Fig. 2

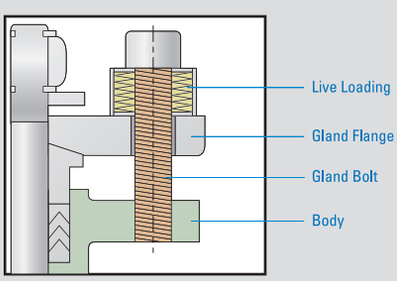

Fig. 3

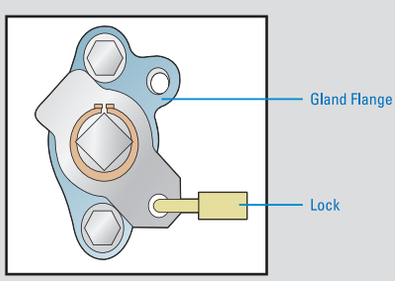

Fig. 4

S&W

FLOATING BALL VALVES

SWFS1

Side Entry Design , One Piece Body

1. Features

- Uni-body construction.
- Stem bearings reduce side thrust.
- Blowout-proof stem.
- Fully enclosed spiral wound graphite filled stainless body gasket available.
- Locking devices available.
- Live-loading available.

2. Standards

- Basic design : API 608, BS 5351
- Flanged ends : ASME B16.5
- Face to face : ASME B16.10
- Inspection and test : API 598

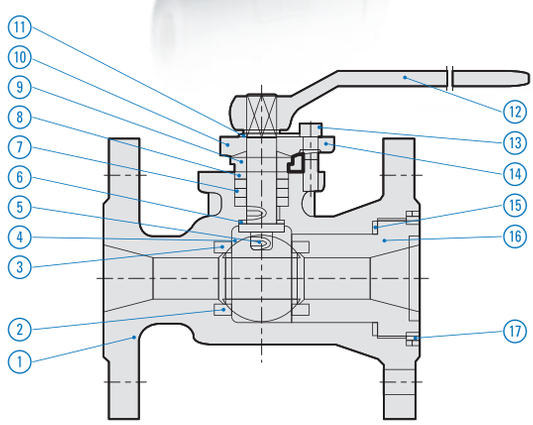

3. Material Specifications

No.	Parts	Standard	Stainless Steel	Sour Service	Low Temperature Service
1	Body	ASTM A216 WCB	ASTM A351 CF8M	A216 WCB-NACE MR0175	ASTM A352 LCB
2	Seat Ring	R-PTFE	R-PTFE	R-PTFE	R-PTFE
3	Ball	ASTM A105/ENP	ASTM A182 F316	ASTM A105/ENP	ASTM A182 F316
4	Plug	S.S.	S.S.	S.S.	S.S.
5	Spring	S.S.	S.S.	S.S.	S.S.
6	Washer	PTFE	PTFE	PTFE	PTFE
7	Packing	PTFE/Graphite	PTFE/Graphite	PTFE/Graphite	PTFE/Graphite
8	Stem	A105 + ENP/F6a	ASTM A182 F316	ASTM A182 F6a	ASTM A182 F316
9	Gland	ASTM A276 420	ASTM A276 316	ASTM A276 420	ASTM A276 316
10	Gland flung	ASTM A216 WCB	ASTM A351 CF8M	ASTM A216 WCB	ASTM A352 LCB
11	Gauge block	C.S.	S.S.	C.S.	S.S.
12	Lever	Ductlile Iron	Ductlile Iron	Ductile Iron	Ductile Iron
13	Bolt	ASTM A193 B7	ASTM A193 B8	ASTM A193 B7M	ASTM A320 L7M
14	Retaining ring	C.S.	S.S.	C.S.	S.S.
15	Gasket	PTFE	316 + Graphite	PTFE	PTFE
16	Closure	ASTM A216 WCB	ASTM A351 CF8M	ASTM A216 WCB	ASTM A352 LCB
17	Gasket	Graphite	Graphite	Graphite	Graphite

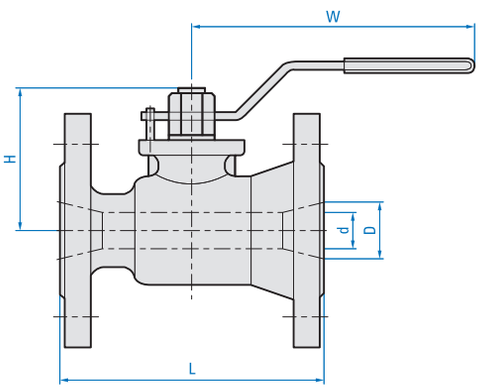

NPS 1/2" ~ 2"

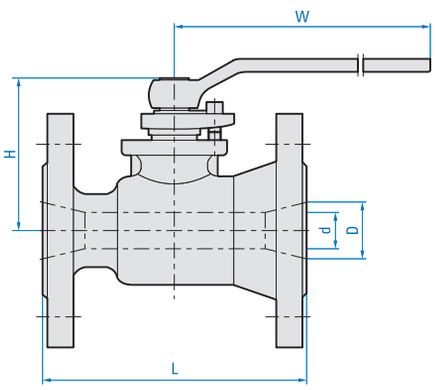

NPS 3" ~ 10"

Dimensions (Class 150)

Size(in.)	1/2	3/4	1	1-1/2	2	2-1/2	3	4	6	8	10
d(mm)	9.5	12.7	19	30	38	51	64	76	114	144	187
D(mm)	12.7	19	25.4	38	51	64	76	102	152	203	254
L(mm)	108	117	127	165	178	191	203	229	267	292	330
H(mm)	54	59	64	90	102	112	121	166	208	246	303
W(mm)	140	140	160	160	260	260	260	320	400	300	400
Weight(kg)	2.1	3	4.1	6.5	9	11.2	15.3	28.6	53	81	150

Dimensions (Class 300)

Size(in.)	1/2	3/4	1	1-1/2	2	2-1/2	3	4	6	8	10
d(mm)	9.5	12.7	19	30	38	51	64	76	114	144	187
D(mm)	12.7	19	25.4	38	51	64	76	102	152	203	254
L(mm)	140	152	165	190	216	241	283	305	403	419	457
H(mm)	54	59	64	90	102	112	121	166	208	246	303
W(mm)	140	140	160	160	260	260	260	320	300	300	400
Weight(kg)	2.8	3.6	4.9	10.4	10	16.1	23	39.5	82	124	206

S&W

FLOATING BALL VALVES

SWFS2

Side Entry Design , Two Piece Body

1. Features

- Split-body construction.
- Blowout-proof stem.
- Fully enclosed spiral wound grophite filled stainless body gasket available.
- Locking devices available.
- Live-loading available.

2. Standards

- Basic design : API 608, BS 5351
- Flanged ends : ASME B16.5
- Face to face : ASME B16.10
- Inspection and test : API 598

3. Material Specifications

No.	Parts	Standard
1	BODY	A216 WCB
2	CAP	A216 WCB
3	STEM	A276 T316
4	BALL	A351 CF8M
5	GLAND	A276 T304
6	GLAND FLANGE	A276 T304
7	SEAT RING	PTFE
8	GASKET	PTFE
9	GLAND PACKING	PTFE
10	THRUST WASHER	PTFE
11	CAP BOLT	A193 B7
12	CAP BOLT NUT	A194 2H
13	GLAND BOLT	A193 B7
14	SNAP RING	A36
15	HANDLE	STEEL
16	STOPPER	A36
17	ANTI STATIC	A276 T316
18	LOCKING PLATE	A36
19	LOCKING PLATE BOLT	A193 B7
20	TOP BOLT	A36
21	TOP WASHER	A36

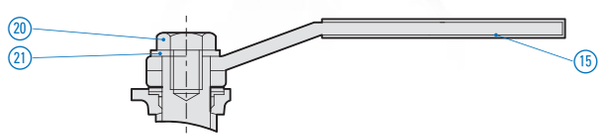

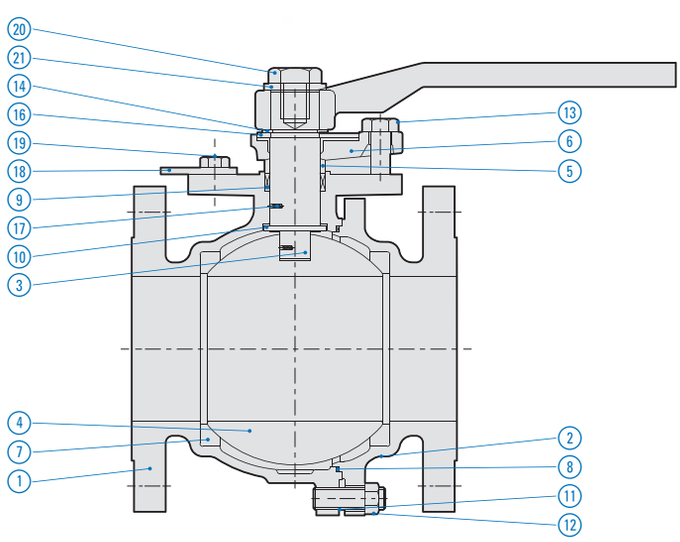

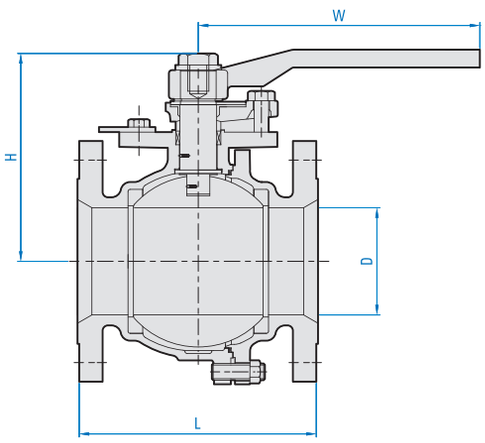

Full Bore

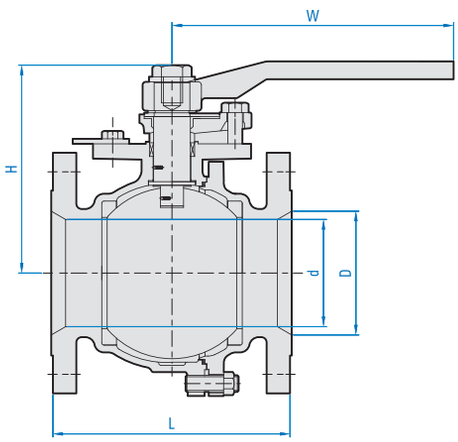

Reduce Bore

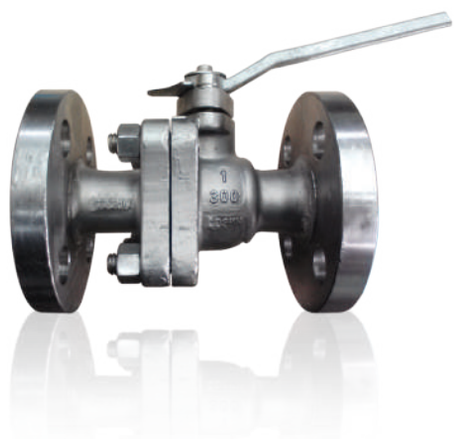

Dimensions (Class150)

	Size(in.)	1/2	3/4	1	1-1/2	2	2-1/2	3	4	6	8	10	12
Full Bore	D(mm)	13	19	25	38	51	64	76	102	152	203	254	305
	L(mm)	108	117	127	165	178	191	203	229	394	457	533	610
	H(mm)	61	66	76	95	110	142	156	181	270	345	350	482
	W(mm)	130	130	160	230	230	400	400	700	300*	300*	400*	600*
	Weight(kg)	2.4	3.3	4.8	8	9.5	15	19.8	32	94	165	199	376
Reduced Bore	Size(in.)	3/4* 1/2*3/4	1*3/4*1	1-1/2*1* 1-1/2	2*1-1/ 2*2	2*1/2*2*2* 1/2	3*2* 1/2*3	4*3*4	6*4*6	10*8*10	12*10*12		
	D(mm)	19	25	38	51	64	76	102	152	254	305		
	L(mm)	117	127	165	178	191	203	229	394	533	610		
	H(mm)	82	85	100	115	120	150	162	191	340	442		
	W(mm)	130	130	160	230	230	400	400	460	300*	400*		
	d(mm)	13	19	25	38	51	64	76	102	203	254		
	Weight(kg)	2.6	4.5	6	9.5	14.6	19	32.5	58	160	229		

Dimensions (Class 300)

	Size(in.)	1/2	3/4	1	1-1/2	2	2-1/2	3	4	6	8	10
Full Bore	D(mm)	13	19	25	38	51	64	76	102	152	203	254
	L(mm)	140	152	165	190	216	241	283	305	403	502	568
	H(mm)	62	68	80	100	110	148	162	188	283	360	422
	W(mm)	150	150	180	250	250	400	400	700*	300*	400*	400*
	Weight(kg)	3	3.5	6.2	11	16	25	40	57.5	128	252	402
Reduced Bore	Size(in.)	3/4* 1/2*3/4	1*3/4*1	1-1/2*1* 1-1/2	2*1-1/ 2*2	2*1/2*2*2* 1/2	3*2* 1/2*3	4*3*4	6*4*6	8*6*8	10*8*10	
	D(mm)	19	25	38	51	64	76	102	152	203	254	
	L(mm)	152	165	190	216	241	283	305	403	502	568	
	H(mm)	82	85	100	115	120	153	162	191	290	340	
	W(mm)	130	130	160	230	230	400	400	460	300*	400*	
	d(mm)	13	19	25	38	51	64	76	102	152	203	
	Weight(kg)	3.5	5.5	10	14.5	23.5	29	55	80	117	199	

* : Gear operation

S&W

FLOATING BALL VALVES

SWFS3

Side Entry Design , Three Piece Body

1. Features

- Three Pieces body construction.
- Blowout-proof stem.
- Locking devices available.
- Live-loading available.

2. Standards

- Basic Design : API 608, BS 5351
- Socket welding ends/Threaded End : ASME B16.11
- Inspection and Test : API 598

3. Material Specifications

No.	Parts	Standard
1	BONNET	A216 WCB
2	SEAL RING	PTFE
3	GASKET	PTFE
4	BALL	A351 CF8M
5	O-RING	NBR
6	STEM	A276 T316
7	PACKING PLATE	A36
8	PACKING COVER	A276 T304
9	PACKING	PTFE
10	BODY	A216 WCB
11	WRENCH	A36
12	STUD	A193 B7
13	NUT	A194 2H

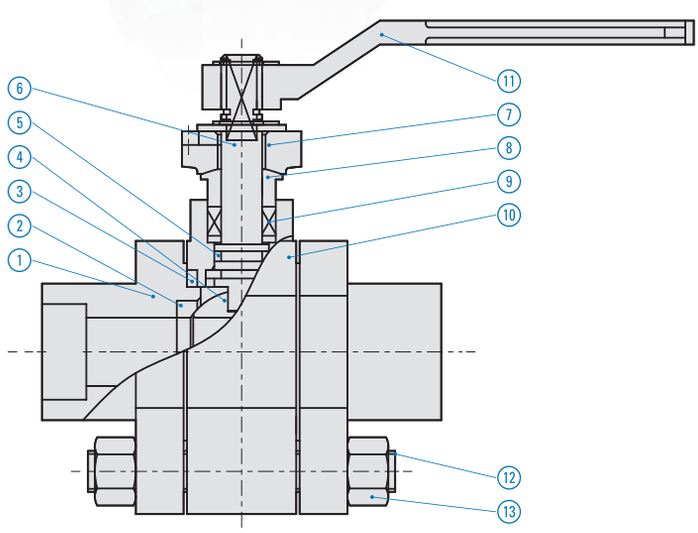

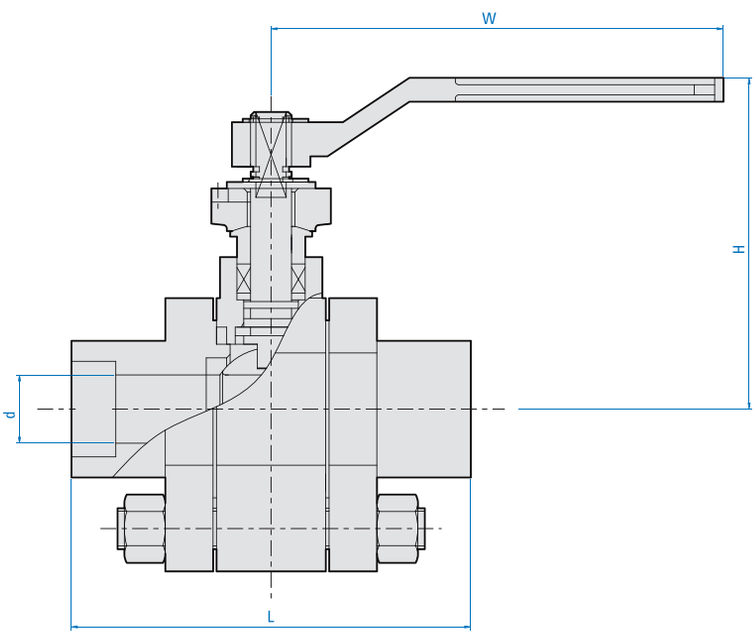

CL1500-CL2500

Spec(NPS) Specification	Size(F.P)		1/2	3/4	1	1 1/4	1 1/2	2
Face to face	L	CL 1500	216	229	256	279	305	368
		CL 2500	264	273	308	349	384	451
Center to handle end	W	CL 1500	230	230	350	280	400	400
		CL 2500	280	280	95	350	400	400
Height	H	CL 1500	75	85	85	105	110	130
		CL 2500	75	85	95	105	1 10	130
Inside diameter	d	CL 1500	13	19	25	32	38	49
		CL 2500	13	19	25	32	38	42
Weight(kg)		CL 1500	2.5	5.8	5.8	6.8	11.5	13.7
		CL 2500	2.7	6.3	6.3	6.8	12	15

S&W

FLOATING BALL VALVES

Structure Properties SWFT1

Fire-Proof Structure

A fire proof metal ring is set between ball and seat. In case of fire high temperature damages the valve seat and caused, but the ball is compacted tightly upon the ring to ensure some degree of tightness and the safely of the system.

Stem-Shoot-Up Prevention

The stem is designed with a shoulder union prevent Blow-Up cause by high pressure inside the valve and separate from the ball.

Packing Flat-Surface Tightness

Stock of stem packings to ensure tightness of the stem is now apply a prelightening force the spring to the surface between the stem shoulder and the cover shoulder to ensure tightness.
The opening torque will be reduced.

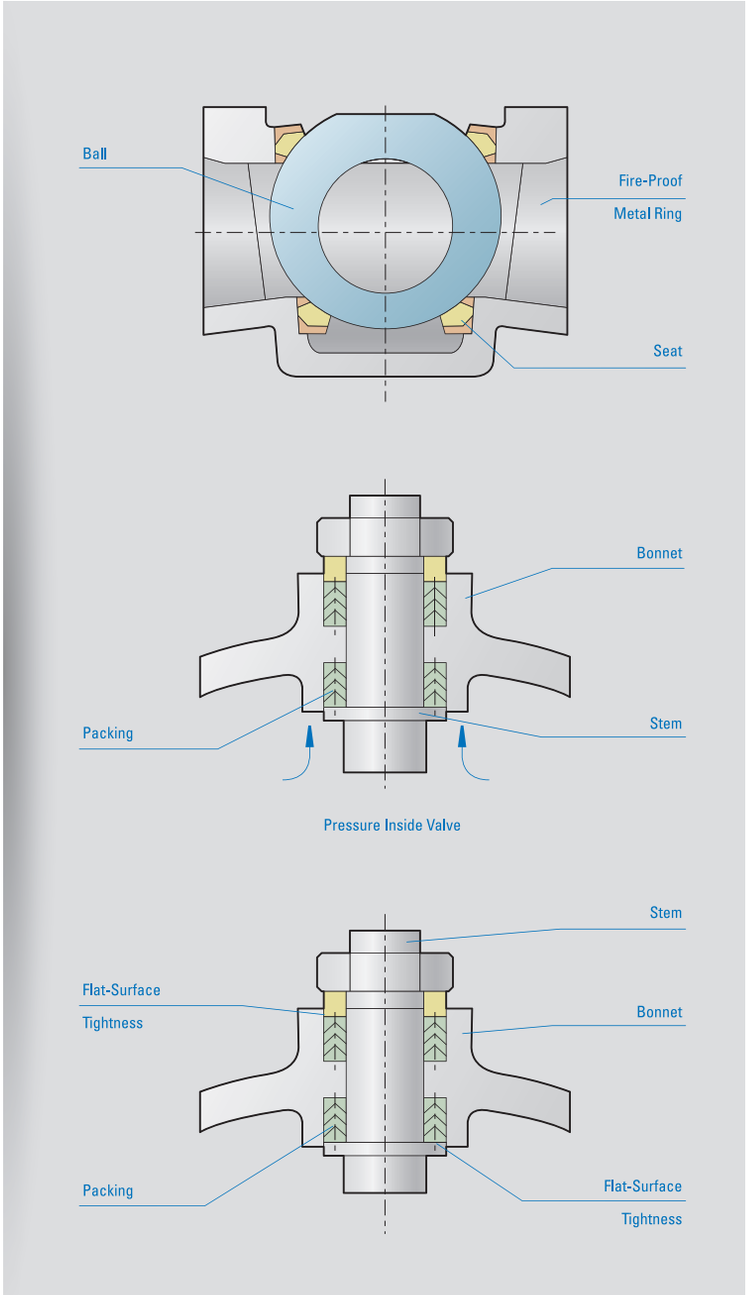

General

S&W TTQ series Top Entry ball valve is designed with new integrated sloping valve. It is the most ideal valve which is used in a wide range operation at petrochemical, metallurgical, electrical, textile, feedwater & drain, medical industries and the departments of environmental protection. The valves not only be applied to the control of liquid, gas and steam, but also to the control of the waste water and fibred, grained, sticky fluid, which other valves can not be applied to.

Top Entry Design , One Piece Body

1. Features

- Unique structure of seat and body.
- Excellent tightness.
- Fire-Proof structure.
- Static-electricity-proof property.
- Stem-Blow-up prevention.
- Packing flat-surfare tightness.

2. Standards

- Basic Design : API 608, BS 5351
- Flanged Ends : ASME B16.5
- Face to Face : ASME B16.10
- Inspection and Test : API 598

3. Material Specifications

No.	Parts	Standard
1	BODY	A216 WCB
2	BALL	A351 CF8M
3	SEAT	PTFE
4	STEM	A276 T316
5	SPRING	INCONEL X750
6	GASKET	PTFE
7	BONNET	A216 WCB
8	PACKING	PTFE
9	BOLT/NUT	A193 B7 / 194 3H
10	GLAND	A276 T316
11	LIMIT PLATE	A36
12	LEVER	STEEL
13	ADAPTER	SS316

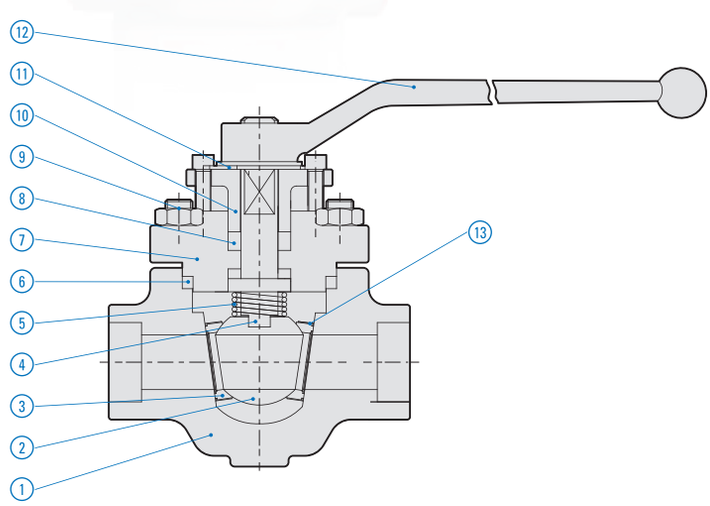

S&W

FLOATING BALL VALVES

SWFT1

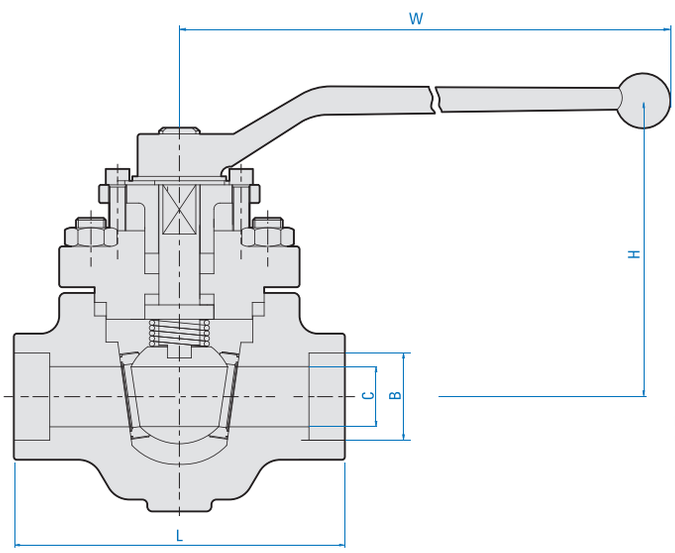

Dimensions (Class 150)

Size(in.)	1/2	3/4	1	1-1/4	1-1/2	2	2-1/2	3	4	5	6	8	10
C(mm)	9.5	13	20.6	25	30.2	38	51	57.2	76.2	102	114.3	152.4	190.5
B(mm)	13	19	25	32	38	51	64	76	102	127	152	203	254
L(mm)	108	117	127	140	165	178	190	203	229	356	394	457	533
H(mm)	100	100	100	120	120	140	180	210	220	230	320	380	420
W(mm)	140	140	140	190	190	230	320	320	450	450	450*	660*	660*
Weight(kg)	2.5	3.2	3.5	6.5	7.2	8.5	14.8	25	35	75	135	193	275

Dimensions (Class 300)

Size(in.)	1/2	3/4	1	1-1/4	1-1/2	2	2-1/2	3	4	5	6	8	10
C(mm)	9.5	13	20.6	25	30.2	38	51	57.2	76.2	102	114.3	152.4	190.5
B(mm)	13	19	25	32	38	51	64	76	102	127	152	203	254
L(mm)	140	152	165	178	190	216	241	283	305	381	403	502	568
H(mm)	100	100	100	120	120	140	180	210	220	230	320	380	420
W(mm)	140	140	140	190	230	230	320	450	450	450	450*	660*	660*
Weight(kg)	3.0	4.2	4.2	10.5	12	13.5	24	37.5	41	78	147.5	207	296

Notes : The size NO* is turbine stem structurc size DM 150~250 can fit a handle as well

TRUNNION MOUNTED BALL VALVES

Structure Properties

General

S&W Trunnion mounted ball valves are designed in accordance with API 6D for classes ASME Class 150,300,600,900,1 500,and 2500.
Tow-piece split body cast steel and Three-piece forged steel side entry design bolted connections between body and closure, trunnion bolted connection, body thickness comply with ANSI B16.34.
Seat ring is floating type, spring loaded lo assure the contact with ball in order to provide an effective tight seal even at low differential pressure between cavity and downstream closure.
Standard design is soft seated. A different soft seat materials are available based on the customer working condition.
Available in Full and Reduced Bore.
Elecctric, pneumatic and hydraulic actuators are available based on customer requirement.
Valves have been designed for use with various combinations of materials such us:
Carbon Steel, Low Carbon steel, special alloy, stainless steel, monel, inconel.

Body Joint Construction

Three pieces body and side entry design, graphite ring or o-ring viton (or request) seal ensure absolute seal integrity. The boiled body designs include a tight tolerance overlapping metal fit between the body and the adapter to minimize any possibility of movement due to pipeline stress. High temperature spiral wound stainless steel /grafoil filled gasket is used for ubsolute seal. Body and adaptors are dimensioned for metal contact to ensure correct gasket crush.

Stem Design/Anti Blowout

The stem is made separately from the ball, anti blow-up design with suitable PTFE and graphite rings and antistatic devices. See Fig.1

Anti-Static Device

All flow control-floating flange ball valves include dual grounding systems from stem to ball and stem to body. Valve testing to BS 5351 and BS 5146 was performed for all sizes, and witnessed by a third party inspection company. See Fig.1

Emergency Sealant Injection

Mecco trunnion type ball valves are filled with emergency seals to restore sealing in case of sofl seal damage. See Fig.1 Fig.2

Fire Safety

All fire-safe valves conform fo API 607 and API 6FA standards, see Fig.1 and Fig.2

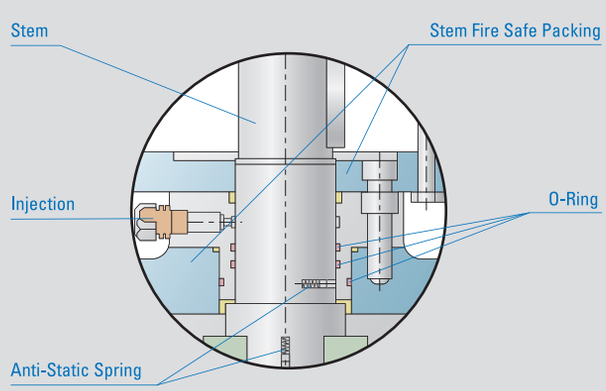

Fig.1

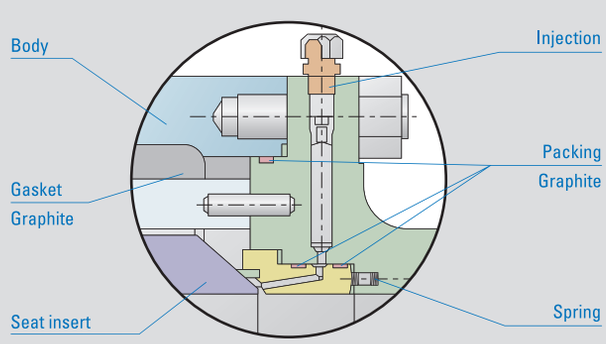

Fig.2

S&W

TRUNNION MOUNTED BALL VALVES

SWTS2

Side Entry Design , Two Piece Body

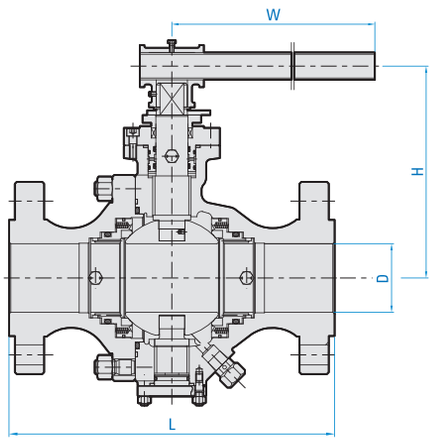

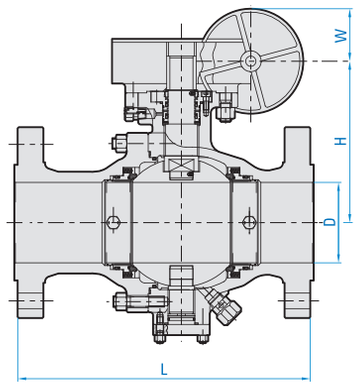

Full Port (Class 150)

Size(in.)	D(mm)	L(mm)	H(mm)	W(mm)	Weight(kg)
2	51	178	165	230	17
3	76	203	193	400	33
4	102	220	231	460	50
6	152	394	390	1000	93
8	203	457	495	*500	166
10	254	533	505	*500	273
12	305	610	560	*500	475
14	337	686	600	*500	570
16	387	762	750	*500	778
18	438	864	845	*500	935
20	480	914	910	*500	1190
22	540	1016	1000	*500	1346
24	591	1067	1065	*500	1579

Reduce Port (Class 150)

Size(in.)	d(mm)	D(mm)	L(mm)	H(mm)	W(mm)	Weight(kg)
3x2x3	51	76	203	165	230	30
4x3x4	76	102	229	193	400	47
6x4x6	102	152	394	231	400	90
8x6x8	152	203	457	390	460	161
10x8x10	203	254	533	495	1000	268
12x10x12	254	305	610	505	*500	467
14x12x14	305	337	686	560	*500	560
16x14x16	337	387	762	600	*500	766
18x16x18	387	438	864	750	*500	902
20x18x20	438	489	914	845	*500	1130
22x20x22	489	540	1016	910	*500	1300
24x22x24	540	591	1067	1000	*500	1520

Full Port (Class 300)

Size(in.)	D(mm)	L(mm)	H(mm)	W(mm)	Weight(kg)
2	51	216	165	230	18
3	76	283	193	400	40
4	102	305	231	750	63
6	152	403	390	1000	150
8	203	502	495	1500	240
10	254	568	505	*500	305
12	305	648	560	*500	507
14	337	762	600	*500	602
16	387	838	750	*500	1000
18	438	914	845	*500	1160
20	489	991	910	*500	1320
22	540	1092	1000	*500	1540
24	591	1143	1065	*500	1874

* Gear operator

Reduce Port (Class 300)

Size(in.)	d(mm)	D(mm)	L(mm)	H(mm)	W(mm)	Weight(kg)
3x2x3	51	76	283	165	230	38
4x3x4	76	102	305	193	400	60
6x4x6	102	152	403	231	750	147
8x6x8	152	203	502	390	1000	234
10x8x10	203	254	568	495	1500	295
12x10x12	254	305	648	505	*500	488
14x12x14	305	337	762	560	*500	570
16x14x16	337	387	838	600	*500	910
18x16x18	387	438	914	750	*500	1020
20x18x20	438	489	991	845	*500	1280
22x20x22	489	540	1092	910	*500	1360
24x22x24	540	591	1143	1000	*500	1670

Full Port (Class 600)

Size(in.)	D(mm)	L(mm)	H(mm)	W(mm)	Weight(kg)
2	51	292	176	400	27
3	76	356	247	750	50
4	102	432	335	1000	80
6	152	559	420	1500	220
8	203	660	430	*500	350
10	254	787	520	*500	600
12	305	838	665	*500	820
14	337	889	720	*500	1130
16	387	991	780	*500	1550
18	438	1092	950	*500	2100
20	489	1194	1010	*500	2800
24	591	1397	1120	*500	3626

Reduce Port (Class 600)

Size(in.)	d(mm)	D(mm)	L(mm)	H(mm)	W(mm)	Weight(kg)
3x2x3	51	76	356	176	400	41
4x3x4	76	102	432	247	750	70
6x4x6	102	152	559	335	1000	122
8x6x8	152	203	660	420	1500	255
10x8x10	203	254	787	430	*500	440
12x10x12	254	305	838	520	*500	662
14x12x14	305	337	889	665	*500	1060
16x1 4x16	337	387	991	720	*500	1440
18x16x18	387	438	1092	780	*500	1860
20x18x20	438	489	1194	950	*500	2400
24x20x24	489	591	1397	1010	*500	3240

Full Port (Class 900)

Size(in.)	D(mm)	L(mm)	H(mm)	W(mm)	Weight(kg)
2	51	368	192	460	52
3	76	381	279	1000	97
4	102	457	355	1500	138
6	152	610	385	*500	288
8	203	737	460	*500	448
10	254	838	600	*500	748
12	305	965	690	*500	1018
14	324	1029	785	*500	1398
16	375	1130	850	*500	1828
18	426	1219	915	*500	2328
20	473	1321	975	*610	2928
24	572	1549	1030	*610	4178

* Gear operator

Reduce Port (Class 900)

Size(in.)	d(mm)	D(mm)	L(mm)	H(mm)	W(mm)	Weight(kg)
3x2x3	51	76	381	192	460	83
4x3x4	76	102	457	279	1000	103
6x4x6	102	152	610	355	1500	201
8x6x8	152	203	737	385	*500	348
10x8x10	203	254	838	460	*500	598
12x10x12	254	305	965	600	*500	788
14x12x14	305	324	1029	690	*500	1100
16x1 4x16	324	375	1130	785	*500	1420
18x16x18	375	426	1219	850	*500	1928
20x18x20	426	473	1321	915	*500	2428
24x20x24	473	572	1549	975	*610	3578

S&W

TRUNNION MOUNTED BALL VALVES

SWTS3

Side Entry Design , Three Piece Body

1. Features

- Three pieces body.
- Valve is designed in accordance with the requirements of API 6D for pipeline service.
- Antistatic and anti blow-out stem design.
- Seat design gives perfect tightness and is available as either self-relieving type or double piston effect type.
- Design minimizes friction leading to low operating torque.
- Available as double block and bleed execution, which allows for venting and draining of ling fluid from the body cavity.
- Available Full and Reduced bore.
- Ball valves firesafe tested according to BS EN 12266-2, API 6FA and API 607.
- Electric, pneumatic and hydraulic actuators are available based on customer's requirement.

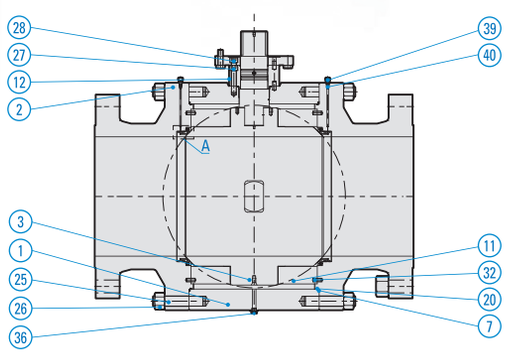

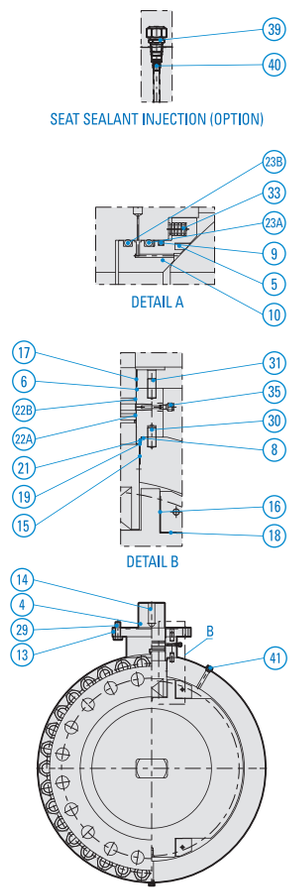

2. Material Specifications

No.	Parts	Standard	No.	Parts	Standard	No.	Parts	Standard
1	BODY	A216 WCB	16	TRUNNION BEARING	DU-BUSH	26	NUT	A194 2H
2	CAP	A216 WCB	17	PAD BEARING	DU-BUSH	27	SEAL COVER BOLT	A193 B8
3	BALL	A351 CF8M	18	THRUST BEARING	SS304 + PTFE	28	PAD BOLT	A193 B8
4	STEM	A276 T316	19	THRUST BEARING	DU-BUSH	29	GEAR BOX NOLT	A194 B7
5	SEAT RING	PTFE	20	O-RING	NBR	30	PIN-A	SS304
6	PACKING	PTFE		BACK UP RING	PTFE	31	PIN-B	SS304
7	GASKET	PTFE	21	O-RING	NBR	32	PIN-C	SS304 X 7
8	GASKET	PTFE		BACK UP RING	PTFE	33	SPRING	INCONEL X 50
9	FIRE SAFE SEAL	GRAPHITE	22A	O-RING	NBR	35	SEALANT FITTING	SS304
10	SEAT RETAINER	A276 T316		BACK UP RING	PTFE	36	DRAIN PLUG	SS304
11	TRUNNION PLATE	A276 T316	22B	O-RING	NBR	39	SEALANT INJECTION	SS304
12	SEAL COVER	A105	23A	O-RING	NBR	40	CHECK VALVE	SS304
13	ISO MOUNTING PAD	A105		BACK UP RING	PTFE	41	VENT PLUG	SS304
14	KEY	A576 1045	23B	O-RING	NBR			
15	STEM BEARING	DU-BUSH	25	CAP BOL	A193 B7			

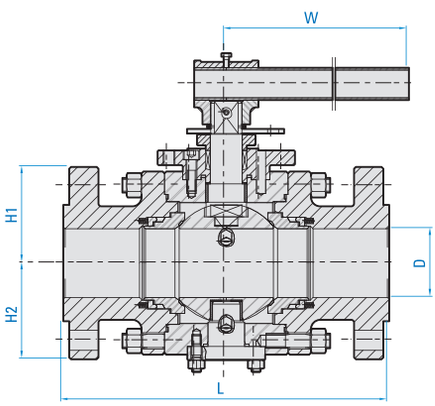

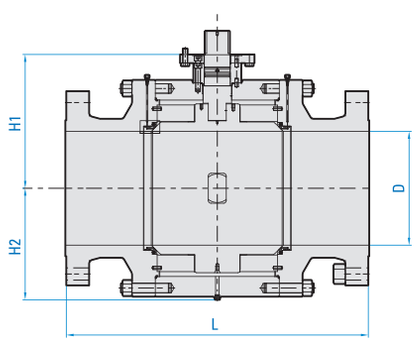

Full Port (Class 150)

Size(in.)	D(mm)	L(mm)	H1(mm)	H2(mm)	Weight(kg)
2	51	178	105	100	32
3	76	203	160	130	53
4	102	229	205	170	100
6	152	394	245	190	157
8	203	457	280	230	250
10	254	533	326	280	390
12	305	610	350	300	578
14	337	686	380	330	770
16	387	762	415	350	1100
18	438	864	440	400	1250
20	489	914	500	440	1800
22	540	991	520	470	2400
24	591	1067	585	530	3100
26	635	1143	630	570	3700
28	686	1244	645	650	4500
30	736	1295	700	700	5300
32	781	1371	740	750	6900
34	832	1473	770	780	8200
36	876	1524	820	800	9700
40	978	1753	900	900	13000
42	1022	1855	960	950	15000
48	1168	2134	1100	1100	23000
56	1368	2489	1300	1250	34150

Reduce Port (Class 150)

Size(in.)	d(mm)	D(mm)	L(mm)	H1(mm)	H2(mm)	Weight(kg)
3x2x3	51	76	203	105	100	36
4x3x4	76	102	229	160	130	63
6x4x6	102	152	394	205	170	105
8x6x8	152	203	457	245	190	200
10x8x10	203	254	533	280	230	300
12x10x12	254	305	610	326	280	470
14x10x14	254	337	686	320	280	530
14x12x14	305	337	686	350	300	630
16x12x16	305	387	762	350	300	700
16x14x16	337	387	762	380	330	830
18x16x18	387	438	864	415	350	1100
20x16x20	387	489	914	415	350	1200
22x18x22	438	489	914	440	400	1300
24x20x24	489	591	1067	500	440	2100
30x24x30	635	736	1295	585	530	3400
36x30x36	781	876	1524	700	700	6400

Notes

1. Face to face are according to API 6D
2. For 2" to 24". flanges are according to ASME B16.5
3. For over 24". flanges are according to ASME B16.47 series A .

S&W

TRUNNION MOUNTED BALL VALVES

SWTS3

Side Entry Design , Three Piece Body

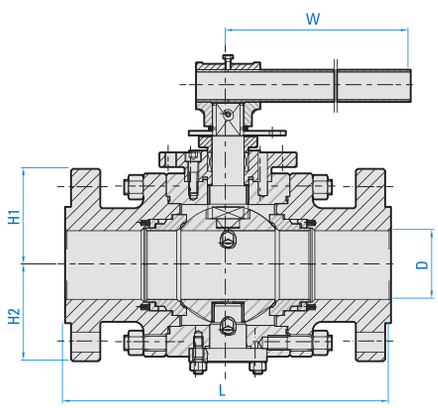

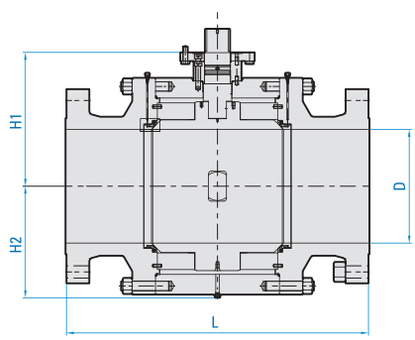

Full Port (Class 300)

Size(in.)	D(mm)	L(mm)	H1(mm)	H2(mm)	Weight(kg)
2	51	216	105	100	31
3	76	283	160	130	58
4	102	305	205	170	110
6	152	403	245	190	180
8	203	502	280	230	280
10	254	568	326	280	410
12	305	648	350	300	760
14	337	762	380	330	1100
16	387	838	415	350	1600
18	438	914	440	400	1700
20	489	991	500	440	2300
22	540	1092	520	470	2900
24	591	1143	585	530	3500
26	635	1245	630	570	4900
28	686	1346	645	650	6000
30	736	1397	700	700	6800
32	781	1524	740	750	8000
34	832	1626	770	780	9100
36	876	1727	820	800	11000
40	978	1956	900	900	14000
42	1022	2083	960	950	17000
48	1168	2170	1100	1100	25000
56	1368	2743	1300	1275	38200

Reduce Port (Class 300)

Size(in.)	d(mm)	D(mm)	L(mm)	H1(mm)	H1(mm)	Weight(kg)
3x2x3	51	76	283	105	100	34
4x3x4	76	102	305	160	130	70
6x4x6	102	152	403	205	170	120
8x6x8	152	203	502	245	190	220
10x8x10	203	254	568	280	230	320
12x10x12	254	305	648	326	280	600
14x10x14	254	337	762	320	280	660
14x12x14	305	337	762	350	300	850
16x12x16	305	387	838	350	300	1000
16x14x16	337	387	838	380	330	1200
18x16x18	387	438	914	415	350	1700
20x16x20	387	489	991	415	350	1700
22x18x22	438	489	991	440	400	1850
24x20x24	489	591	1143	500	440	2700
30x24x30	591	736	1397	585	530	4600
36x30x36	736	876	1727	700	700	8000

Notes

1.Face to face are according to API 6D

2. For 2" to 24". flanges are according to ASME B16.5

3. For over 24". flanges are according to ASME B16.47 series A .

Full Port (Class 600)

Size(in.)	D(mm)	L(mm)	H1(mm)	H2(mm)	Weight(kg)
2	51	292	105	100	35
3	76	356	160	130	66
4	102	432	205	170	118
6	152	559	245	190	270
8	203	660	280	230	500
10	254	787	326	280	780
12	305	838	350	300	1100
14	337	889	380	330	1100
16	387	991	415	350	1600
18	438	1092	440	400	2160
20	489	1194	500	440	2700
22	540	1296	520	470	3900
24	591	1397	585	530	5000
26	635	1448	630	570	5700
28	686	1549	645	650	7000
30	736	1651	700	700	9000
32	781	1778	740	750	9800
34	832	1930	770	780	12000
36	876	2083	820	800	14000
40	978	2337	900	900	19000
42	1022	2437	960	950	22000
48	1168	2540	1100	1100	31500
56	1368	2949	1300	1290	48050

Reduce Port (Class 600)

Size(in.)	d(mm)	D(mm)	L(mm)	H1(mm)	H2(mm)	Weight(kg)
3x2x3	51	76	356	105	100	42
4x3x4	76	102	432	160	130	90
6x4x6	102	152	559	205	170	160
8x6x8	152	203	660	245	190	300
10x8x10	203	254	787	280	230	560
12x10x12	254	305	838	326	280	820
14x10x14	254	337	889	320	280	920
14x12x14	305	337	889	350	300	1200
16x12x16	305	387	991	350	300	1400
16x14x16	337	387	991	380	330	1400
18x16x18	387	438	1092	415	350	1700
20x16x20	387	489	1194	415	350	2100
22x18x22	438	489	1194	440	400	2400
24x20x24	489	591	1397	500	440	3300
30x24x30	591	736	1651	585	530	5900
36x30x36	736	876	2083	700	700	11000

Notes

1.Face to face are according to API 6D

2. For 2" to 24". flanges are according to ASME B16.5

3. For over 24". flanges are according to ASME B16.47 series A .

S&W

TRUNNION MOUNTED BALL VALVES

SWTS3

Side Entry Design , Three Piece Body

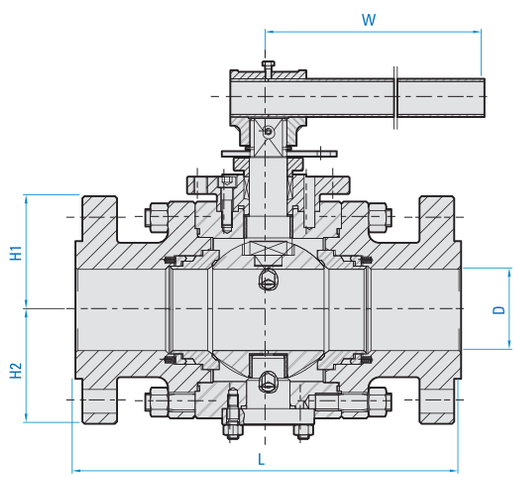

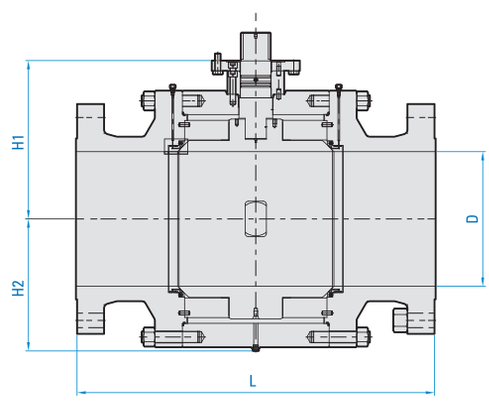

Full Port (Class 900)

Size(in.)	D(mm)	L(mm)	H1(mm)	H2(mm)	Weight(kg)
2	51	368	105	100	50
3	76	381	160	130	80
4	102	457	205	170	150
6	152	610	245	190	360
8	203	737	280	230	620
10	254	838	326	280	1100
12	305	965	350	300	1600
14	324	1029	380	330	1450
16	375	1130	415	350	2200
18	425	1219	440	400	2800
20	473	1321	500	440	4250
22	524	1422	520	470	6500
24	572	1549	585	530	7000
26	669	1651	630	570	8000
28	667	1753	645	650	9500
30	714	1880	700	700	12500
32	762	2032	740	750	12000
34	808	2159	770	780	18000

Reduce Port (Class 900)

Size(in.)	d(mm)	D(mm)	L(mm)	H1(mm)	H2(mm)	Weight(kg)
3x2x3	51	76	381	105	100	55
4x3x4	76	102	457	160	130	100
6x4x6	102	152	610	205	170	220
8x6x8	152	203	737	245	190	450
10x8x10	203	254	838	280	230	560
12x10x12	254	305	965	326	280	820
14x10x14	254	337	1029	320	280	920
14x12x14	305	337	1029	350	300	1200
16x12x16	305	387	1130	350	300	1400
16x14x16	324	387	1130	380	330	1400
18x16x18	375	438	1219	415	350	1700
20x16x20	375	489	1321	415	350	2100
22x18x22	425	489	1321	440	400	2400
24x20x24	473	591	1549	500	440	3300
30x24x30	572	736	1880	585	530	5900
36x30x36	714	876	2286	700	700	11000

Notes

1.Face to face are according to API 6D 2. For 2" to 24". flanges are according to ASME B16.5 3. For over 24". flanges are according to ASME B16.47 series A.

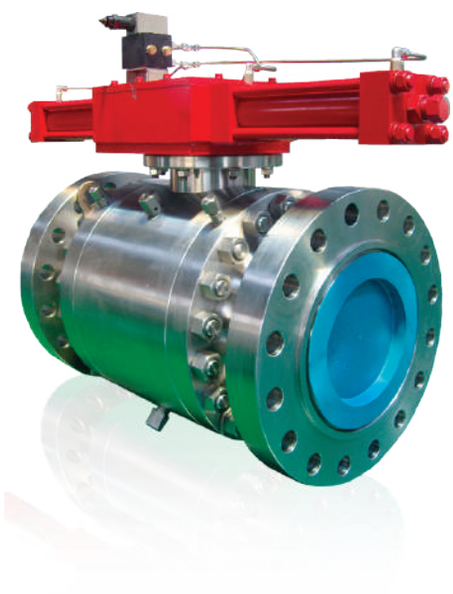

Full Port (Class 1500)

Size(in.)	D(mm)	L(mm)	H1(mm)	H2(mm)	Weight(kg)
2	51	368	110	105	60
3	76	470	165	130	100
4	102	546	220	170	210
6	146	705	260	230	500
8	194	832	310	290	850
10	241	991	370	360	1600
12	289	1130	430	440	2300
14	317	1257	450	450	2950
16	362	1384	500	600	4200

Reduce Port (Class 1500)

Size(in.)	d(mm)	D(mm)	L(mm)	H1(mm)	H2(mm)	Weight(kg)
3x2x3	51	76	470	110	105	70
4x3x4	76	102	546	165	130	130
6x4x6	102	146	705	220	170	300
8x6x8	146	194	832	260	230	580
10x8x10	194	241	991	310	290	1100
12x10x12	241	289	1130	370	360	1800
14x10x14	241	317	1257	370	360	2200
14x12x14	289	317	1257	430	440	2600
16x12x16	289	362	1384	430	440	2900
16x14x16	317	362	1384	450	450	3300
18x16x18	362	407	1537	500	600	5000
20x16x20	362	457	1664	500	600	5600

Full Port (Class 2500)

Size(in.)	D(mm)	L(mm)	H1(mm)	H2(mm)	Weight(kg)
2	44.5	451	120	130	100
3	63.5	578	180	200	200
4	89	673	230	250	390
6	133	914	260	250	790
8	181	1022	400	350	1400
10	226	1270	450	420	2200
12	267	1422	520	510	3400

Reduce Port (Class 2500)

Size(in.)	d(mm)	D(mm)	L(mm)	H1(mm)	H2(mm)	Weight(kg)
3x2x3	44.5	63.5	578	120	130	170
4x3x4	63.5	89	673	180	200	280
6x4x6	89	133	914	260	250	520
8x6x8	133	181	1022	400	250	1100
10x8x10	181	226	1270	450	350	1700
12x10x12	226	267	1422	450	420	2600

Notes

1.Face to face are according to API 6D 2. For 2" to 24". flanges are according to ASME B16.5 3. For over 24". flanges are according to ASME B16.47 series A.

S&W

TRUNNION MOUNTED BALL VALVES

SWTT1

Summary

Series TTQ top entry ball valves are available in size NPS 2 - 56in, ANSI class rating 150 to 1500 and temperature ratings of -46℃ to 200℃. All meet the fire safe requirement of Bs 6755 and API 6FA.

In-line Repair Of Replace

The top entry trunnion supported design and unique seat retraction technique gives the convenience of in-line repair of replace valve internal components without dismantling is from pipe line.

Double Block And Bleed

Because each ball seat shuts off the line fluid independently on the upstream and downstream side, so this series ball valves are suitable for double block und bleed application. Secondary sealant injection system for stem and seat is provided for emergency stop of accidental seat or stem leakage.

Stem Sealing Design

Double Sealing O-rings Prevent leakage from stem area.
Blow-out Prlif Stem internally inserted and functions as the backseat for assured stem sealing at all pressures.

Fire Safe Design

Matal-to-Metal Sealing When non-meatl sealing is deteriorated by fire, seat floats to shut off the line fluid.

Body Design

One-piece Body Rigid as the pipe itself. O-ring & Gasket Combination Prevent leakage from body joint area. Emeraency Sealant Injection Fitting prevent leakage from the seat.

Spring Loaded Seats

Floating Spring Loaded Seats to assure sealing even at low pressures.

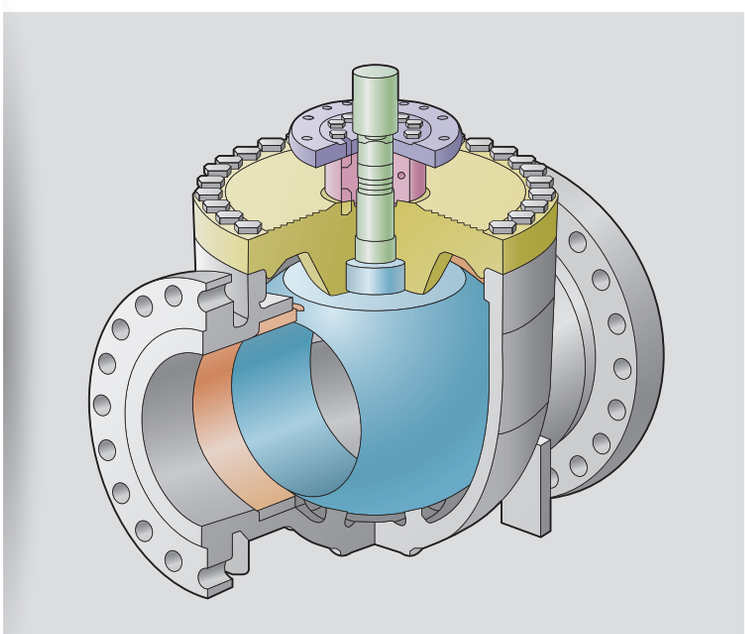

Top Entry Design , One Piece Body

1. Standards

- Basic design :
  ASME B16.34, API 6D, API 608;
- Flanged ends : ASME B16.5;
- Face to Face :
  ASME B16.10. Class 150-300 to Class 600;
- Inspection and test : API 6D, API 598;
- Fire safe : API 607, API 6FA.

2. Material Specifications

No.	Parts	Standard
1	BODY	A216 WCB
2	BONNET	A216 WCB
3	BALL	A351 CF8M
4	STEM	A276 T316
5	RETAINER	SS316
6	SEAT ADAPTER	SS316
7	GLAND FLANGE	A283D
8	L-RING	SS316
S1	BALL SEAT	PTFE
G1	GASKET	PTFE
T1	STEM BUSH	DU-BUSH
T2	STEM BUSH	DU-BUSH
O1	O-RING	NBR
O2	O-RING	NBR
B1	BONNET BOLT/NUT	A193 B7 / A194 2H
B2	GLANDBOLT	A193 B8
B3	GEAR BOLT	A193 B7
B4	EYE BOLT	SS400
SP	SPRING	INCONEL X750
GB	GEAR BOLT	ASS'Y

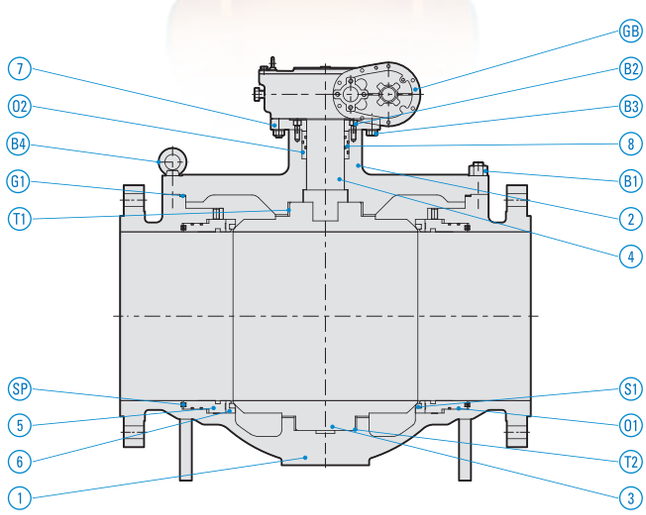

S&W

TRUNNION MOUNTED BALL VALVES

SWTT1

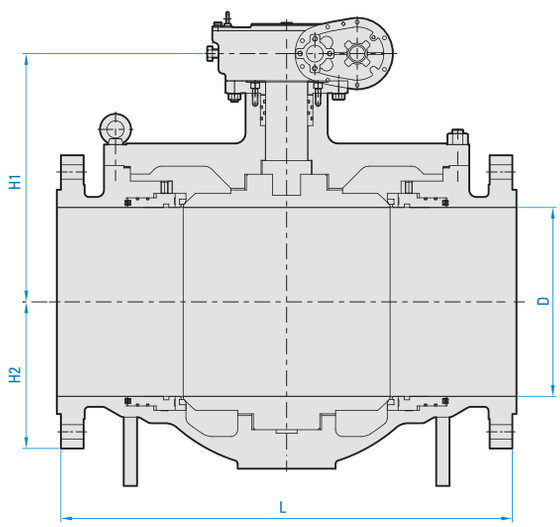

Full Port (Class 150Lb)

Size (in.)	D (mm)	L (mm)	H1 (mm)	H2 (mm)	W (mm)	Weight (kg)
2	51	292	231	78	300	40
3	76	356	273	100	450	65
4	102	432	297	120	500	110
6	152	559	351	162	800	210
8	203	660	375	207	*400	375
10	254	787	415	244	*400	462
12	305	838	452	290	*500	660
14	337	889	473	370	*600	930
16	387	991	498	405	*600	1354
18	438	1092	545	445	*600	2100
20	489	1194	603	540	*600	2680
22	540	1295	688	550	*600	3400
24	591	1397	742	595	*800	4180
26	635	1448	790	640	*800	4850
28	686	1549	797	680	*800	5850
30	737	1651	835	745	*800	6400
32	781	1778	898	770	*800	7850
34	832	1930	926	800	*800	8600
36	876	2083	950	820	*800	9850
40	978	2337	1038	860	*800	1450
42	1022	2438	1066	890	*800	16150
48	1168	2540	1227	970	*800	25000
56	1368	2949	1420	1120	*800	38000

Reduce Port (Class 150Lb)

Size (in.)	d (mm)	D (mm)	L (mm)	H1 (mm)	H2 (mm)	W (mm)	Weight (kg)
2x1 1/2X2	38	51	292	206	63	300	30
3x2x3	51	76	356	231	78	300	47
4x3x4	76	102	432	273	100	450	80
6x4x6	102	152	559	297	120	500	130
8x6x8	152	203	660	351	162	800	232
10x8x10	203	254	787	375	207	*400	422
12x10x12	254	305	838	415	244	*400	495
14x12x14	305	337	889	452	290	*500	550
16x14x16	337	387	991	473	370	*600	800
18x16x18	387	438	1092	498	405	*600	1000
20x18x20	438	489	1194	545	445	*600	1950
22x18x22	438	540	1295	545	445	*600	2640
24x20x24	489	591	1397	603	540	*600	3160
26x22x26	540	635	1448	688	550	*800	3400
28x24x28	591	686	1549	742	595	*800	4120
30x24x30	591	737	1651	742	595	*800	4800
32x26x32	635	781	1778	790	640	*800	5700
34x28x34	686	832	1930	797	680	*800	6150
36x30x36	737	876	2083	835	745	*800	7860

Notes

1.Face to face are according to API 6D

2. For 2" to 24". flanges are according to ASME B16.5

3. For over 24". flanges are according to ASME B16.47 series A.

Full Port (Class 300Lb)

Size (in.)	D (mm)	L (mm)	H1 (mm)	H2 (mm)	W (mm)	Weight (kg)
2	51	292	231	78	300	42
3	76	356	273	100	450	70
4	102	432	297	120	500	132
6	152	559	351	162	800	237
8	203	660	375	207	*400	424
10	254	787	415	244	*500	592
12	305	838	452	290	*500	790
14	337	889	473	370	*600	1150
16	387	991	498	405	*600	1510
18	438	1092	545	445	*600	2350
20	489	1194	603	540	*600	3590
22	540	1295	688	550	*800	4300
24	591	1397	742	595	*800	4680
26	635	1448	790	640	*800	5710
28	686	1549	797	680	*800	6970
30	737	1651	835	745	*800	8480
32	781	1778	898	770	*800	11230
34	832	1930	926	800	*800	11720
36	876	2083	950	820	*800	13560
40	978	2337	1038	860	*800	17700
42	1022	2438	1066	890	*800	19980
48	1168	2540	1227	970	*800	29000
56	1368	2949	1420	1120	*1000	47000

Reduce Port (Class 300Lb)

Size (in.)	d (mm)	D (mm)	L (mm)	H1 (mm)	H2 (mm)	W (mm)	Weight (kg)
2x1 1/2X2	38	51	292	206	63	300	34
3x2x3	51	76	356	231	78	300	56
4x3x4	76	102	432	273	100	450	92
6x4x6	102	152	559	297	120	500	153
8x6x8	152	203	660	351	162	800	309
10x8x10	203	254	787	375	207	*400	506
12x10x12	254	305	838	415	244	*500	684
14x12x14	305	337	889	452	290	*500	850
16x14x16	337	387	991	473	370	*600	670
18x16x18	387	438	1092	498	405	*600	1450
20x18x20	438	489	1194	545	445	*600	6307
22x18x22	438	540	1295	545	445	*600	8780
24x20x24	489	591	1397	603	540	*600	12155
26x22x26	540	635	1448	688	550	*600	14300
28x24x28	591	686	1549	742	595	*600	18560
30x24x30	591	737	1651	742	595	*600	21550
32x26x32	635	781	1778	790	640	*800	24500
34x28x34	686	832	1930	797	680	*800	28900
36x30x36	737	876	2083	835	745	*800	34550

Notes

1.Face to face are according to API 6D

2. For 2" to 24". flanges are according to ASME B16.5

3. For over 24". flanges are according to ASME B16.47 series A.

S&W

TRUNNION MOUNTED BALL VALVES

SWTT1

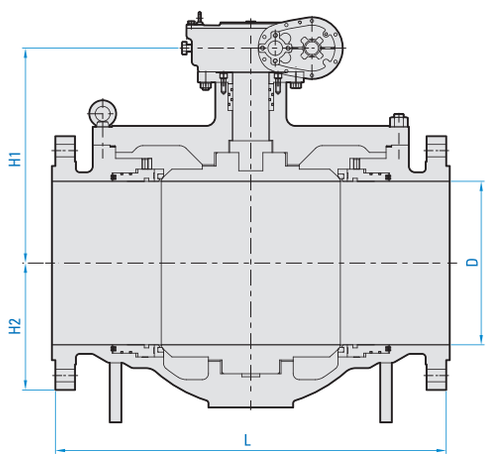

Full Port (Class 600Lb)

Size (in.)	D (mm)	L (mm)	H1 (mm)	H2 (mm)	W (mm)	Weight (kg)
2	51	292	231	78	500	60
3	76	356	273	100	700	75
4	102	432	297	120	800	155
6	152	559	351	162	*400	290
8	203	660	375	207	*400	480
10	254	787	415	244	*500	710
12	305	838	452	290	*500	1050
14	337	889	473	370	*600	1530
16	387	991	498	405	*600	1980
18	438	1092	545	445	*600	2460
20	489	1194	603	540	*600	3420
22	540	1295	688	550	*800	4030
24	591	1397	742	595	*800	5010
26	635	1448	790	640	*800	6340
28	686	1549	797	680	*800	8080
30	737	1651	835	745	*800	9150
32	781	1778	898	770	*800	10760
34	832	1930	926	800	*800	12750
36	876	2083	950	820	*800	15200
40	978	2337	1038	860	*800	19210
42	1022	2438	1066	890	*800	21850
48	1168	2540	1227	970	*800	33000
56	1368	2949	1420	1120	*1000	53000

Reduce Port (Class 600Lb)

Size (in.)	d (mm)	D (mm)	L (mm)	H1 (mm)	H2 (mm)	W (mm)	Weight (kg)
2x1½X2	38	51	292	206	63	400	35
3x2x3	51	76	356	231	78	500	49
4x3x4	76	102	432	273	100	700	85
6x4x6	102	152	559	297	120	800	145
8x6x8	152	203	660	351	162	*400	282
10x8x10	203	254	787	375	207	*400	438
12x10x12	254	305	838	415	244	*500	548
14x12x14	305	337	889	452	290	*500	648
16x14x16	337	387	991	473	370	*600	970
18x16x18	387	438	1092	498	405	*600	1450
20x18x20	438	489	1194	545	445	*600	2960
22x18x22	438	540	1295	545	445	*600	3270
24x20x24	489	591	1397	603	540	*600	4160
26x22x26	540	635	1448	688	550	*600	4480
28x24x28	591	686	1549	742	595	*800	5100
30x24x30	591	737	1651	742	595	*800	5970
32x26x32	635	781	1778	790	640	*800	6540
34x28x34	686	832	1930	797	680	*800	8700
36x30x36	737	876	2083	835	745	*800	10570

Notes

1.Face to face are according to API 6D

2. For 2" to 24". flanges are according to ASME B16.5

3. For over 24". flanges are according to ASME B16.47 series A.

Full Port (Class 900Lb)

Size (in.)	D (mm)	L (mm)	H1 (mm)	H2 (mm)	W (mm)	Weight (kg)
2	51	368	251	83	650	228
3	76	381	305	110	800	512
4	102	457	335	127	*400	946
6	152	610	396	170	*400	1784
8	203	737	436	225	*400	4116
10	254	838	445	260	*500	5910
12	305	965	536	310	*500	10137
14	337	1029	590	395	*600	14141
16	387	1130	625	450	*600	13866
18	438	1219	702	505	*600	22400
20	480	1321	801	565	*600	23544
22	540	1423	910	620	*700	42427
24	591	1549	953	660	*700	43276

Reduce Port (Class 900Lb)

Size (in.)	d (mm)	D (mm)	L (mm)	H1 (mm)	H2 (mm)	W (mm)	Weight (kg)
2x1 1/2X2	38	51	368	234	68	650	163
3x2x3	51	76	381	251	83	650	228
4x3x4	76	102	457	305	110	800	512
6x4x6	102	152	610	335	127	*400	946
8x6x8	152	203	737	396	170	*400	1784
10x8x10	203	254	838	436	225	*400	4116
12x10x12	254	305	965	445	260	*500	5910
14x12x14	305	337	1029	536	310	*500	6700
16x14x16	337	387	1130	590	395	*600	8790
18x16x18	387	438	1219	625	450	*600	10137
20x18x20	438	489	1321	702	505	*600	14141
22x18x22	438	540	1423	801	565	*600	18866
24x20x24	489	591	1549	801	565	*600	28544

Full Port (Class 1500Lb)

Size (in.)	D (mm)	L (mm)	H1 (mm)	H2 (mm)	W (mm)	Weight (kg)
2	51	368	251	83	700	67
3	76	470	310	110	800	130
4	102	546	357	142	*500	260
6	152	705	436	188	*500	560
8	203	832	505	250	*500	870
10	254	991	568	300	*600	1380
12	305	1130	663	350	*600	2290
14	337	1257	705	440	*700	2890
16	387	1384	775	460	*700	4700

Reduce Port (Class 1500Lb)

Size (in.)	d (mm)	D (mm)	L (mm)	H1 (mm)	H2 (mm)	W (mm)	Weight (kg)
2x1 1/2X2	38	51	368	234	68	700	60
3x2x3	51	76	356	251	83	700	83
4x3x4	76	102	432	310	110	800	180
6x4x6	102	152	559	357	142	*500	370
8x6x8	152	203	660	436	188	*500	670
10x8x10	203	254	787	505	250	*500	1080
12x10x12	254	305	838	568	300	*600	1760
14x12x14	305	337	889	663	350	*600	2152
16x14x16	337	387	991	705	440	*700	3228

Full Port (Class 2500Lb)

Size (in.)	D (mm)	L (mm)	H1 (mm)	H2 (mm)	W (mm)	Weight (kg)
2	51	451	291	95	800	122
3	76	578	349	128	*500	250
4	102	673	411	165	*500	468
6	152	914	487	245	*600	950
8	203	1022	572	315	*600	1790
10	254	1270	625	350	*700	2650
12	305	1422	695	410	*700	4300

Reduce Port (Class 2500Lb)

Size (in.)	d (mm)	D (mm)	L (mm)	H1 (mm)	H2 (mm)	W (mm)	Weight (kg)
2x1 1/2X2	38	51	451	269	75	700	82
3x2x3	51	76	578	349	95	800	175
4x3x4	76	102	673	411	128	*500	320
6x4x6	102	152	914	487	165	*500	678
8x6x8	152	203	1022	572	245	*600	1126
10x8x10	203	254	1270	625	315	*600	2187
12x10x12	254	305	1422	695	350	*700	3340

Notes 1.Face to face are according to API 6D 2. For 2" to 24". flanges are according to ASME B16.5 3. For over 24". flanges are according to ASME B16.47 series A.

S&W

TECHNICAL DATA

Steel Pipe Flange And Bolting Dimensions

ASME B16.5 (2"~24") / ASME B16.47 Series A(26"~42")

Classs 150

NPS		A	B	C	D	E	Bolt		L	L1
in	mm	mm	mm	mm	mm	mm	Num.	Diam.(in)	1.6mm razed face	mm
2	50	152	120.5	92	19.1	19	4	5/8	82.55	69.85
2-1/2	65	178	139.5	105	22.3	19	4	5/8	88.9	76.2
3	80	100	152.5	127	23.9	19	4	5/8	88.9	76.2
4	100	220	190.5	157	23.9	19	8	5/8	88.9	76.2
5	125	254	216	186	23.9	22	8	3/4	95.25	82.55
6	150	270	241.5	216	25.4	22	8	3/4	101.6	82.55
8	200	343	208.5	270	28.6	22	8	3/4	107.95	88.9
10	250	406	362	324	30.2	25	12	7/8	114.3	101.6
12	300	483	432	381	31.8	25	12	7/8	120.65	101.6
14	350	533	476.5	413	35	29	12	1	133.35	114.3
16	400	507	530.5	470	36.6	29	16	1	133.35	114.3
18	450	635	578	533	39.7	32	16	1-1/8	146.05	127
20	500	608	635	584	42.9	32	20	1-1/8	158.75	139.7
24	600	813	749.5	602	47.7	35	20	1-1/4	171.45	152.4
26	650	870	806.5	749	68.3	35	24	1-1/4	230.2	190.2
28	700	927	863.5	800	71.4	35	28	1-1/4	236.4	196.2
30	750	984	914.5	857	74.7	35	28	1-1/4	242.4	202.4
32	800	1060	978	014	81.1	41	28	1-1/2	267.2	221.2
34	850	1111	1028.5	065	82.5	41	32	1-1/2	270.6	224.6
36	900	1168	1085.5	1022	90.4	41	32	1-1/2	286.4	240.4
38	950	1238	1149.5	1073	87.4	41	32	1-1/2	279.6	233.6
40	1000	1280	1200	1124	90.4	41	36	1-1/2	286.4	246.4
42	1050	1346	1257.5	1194	96.8	41	36	1-1/2	299.2	253.2

Classs 300

NPS		A	B	C	D	E	Bolt		L	L1
in	mm	mm	mm	mm	mm	mm	Num.	Diam.(in)	1.6mm razed face	mm
2	50	165	127	92	22.3	19	8	5/8	88.9	76.2
2 1/2	65	190	149	105	25.4	22	8	3/4	101.6	82.55
3	80	210	168	127	28.6	22	8	3/4	107.95	88.9
4	100	254	200	157	31.8	22	8	3/4	114.3	95.25
5	125	279	235	186	35.0	22	8	3/4	120.65	107.95
6	150	318	270	216	36.6	22	12	3/4	120.65	107.95
8	200	381	330	270	41.3	25	12	7/8	139.7	120.65
10	250	444	387.5	324	47.7	29	16	1	158.75	139.7
12	300	521	451	381	50.8	32	16	1-1/8	171.45	146.05
14	350	584	514.5	413	54.0	32	20	1-1/8	177.8	133.35
16	400	648	571.5	470	57.2	35	20	1-1/4	190.5	165.1
18	450	711	628.5	533	60.4	35	24	1-1/4	196.85	171.45
20	500	775	686	584	63.5	35	24	1-1/4	203.2	184.15
24	600	914	813	602	69.9	41	24	1-1/2	228.6	203.2
26	650	971	876.5	749	79.2	45	28	1-5/8	257.4	208.4
28	700	1035	940	800	85.5	48	28	1-5/8	282.6	233.6
30	750	1092	997	857	91.9	48	28	1 -3/4	302.4	249.5
32	800	1140	1054	914	98.5	51	28	1-7/8	322.2	266.2
34	850	1206	1105	965	101.6	51	28	1-7/8	328.4	272.4
36	900	1270	1168.5	1022	104.6	54	32	2	340.8	281.8
38	950	1168	1092	1020	107.9	41	32	1-1/2	321.4	275.4
40	1000	1238	1155.5	1086	114.3	45	32	1-5/8	340.2	290.7

ASME B16.47 Series B(26"~48")

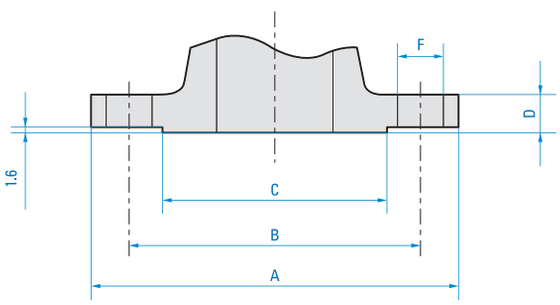

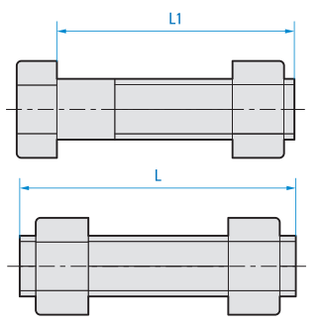

Classs 150

NPS		A	B	C	D	E	Bolt		L	L1
in	mm	mm	mm	mm	mm	mm	Num.	Diam.(in)	1.6mm razed face	mm
26	650	786	745	711	41.5	22	36	3/4	140	235
28	700	837	795	762	44.5	22	40	3/4	146	235
30	750	887	846	813	44.5	22	44	3/4	146	235
32	800	941	900	864	46.5	22	48	3/4	146	273
34	850	1005	957	921	49	26	40	7/8	159	273
36	900	1057	1010	972	52.5	26	44	7/8	165	273
38	950	1124	1070	1022	54	29.5	40	1	178	292
40	1000	1175	1121	1080	56	29.5	44	1	178	298
42	1050	1226	1172	1130	59	29.5	48	1	184	165
48	1200	1392	1335	1289	65	32.5	44	1-1/8	203	184

Classs 300

NPS		A	B	C	D	E	Bolt		L	L1
in	mm	mm	mm	mm	mm	mm	Num.	Diam.(in)	1.6mm razed face	mm
26	650	867	803	736.5	89	35.5	32	11/4	260	121
28	700	921	857	787	89	35.5	36	11/4	260	127
30	750	991	921	845	94	38	36	13/8	273	127
32	800	1054	978	902	103	41	32	11/2	298	134
34	850	1108	1032	952.5	103	41	36	11/2	298	146
36	900	1172	1089	1010	103	45	32	15/8	305	152
38	950	1222	1140	1060	111	45	36	15/8	324	159
40	1000	1273	1191	1115	116	45	40	15/8	330	165
42	1050	1334	1245	1168	119	48	36	13/4	343	165
48	1200	1511	1416	1327	128.5	51	40	17/8	368	184

S&W

TECHNICAL DATA

Butt Welding End Details

ASME B16.25

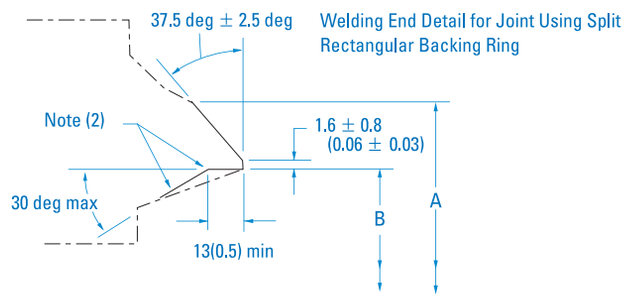

		Pipe Schedule No.	Named Pipe Size									
			2 1/2	3	4	5	6	8	10	12	14	16
A	in.	All	2.96	3.59	4.62	5.69	6.78	8.78	10.94	12.97	14.25	16.25
	mm		75	91	117	144	172	223	278	329	362	413
B	in.	STD								12.000	13.250	15.250
	mm									304.80	336.55	387.35
	in.	40	2.469	3.068	4.02 6	5.047	6.065	7.981	10.020	11.938	13.124	15.000
	mm		62.5	78	102	128	154	202	254.5	303	333	381
	in.	XS								11.750	13.000	
	mm									298.45	330.20	
	in.	60						7.813	9.750	11.626	12.812	14.688
	mm							198.45	247.65	295.30	325.42	373.08
	in.	BO	2.323	2.900	3.826	4.813	5.761	7.625	9.562	11.374	12.500	14.312
	mm		59	73.5	97	122	146	193.5	243	289.00	317.5	363.5
	in.	100						7.437	9.312	11.062	12.124	13.938
	mm							189	236.5	281	308	354
	in.	120			3.624	4.563	5.501	7.187	9.062	10.750	11.812	13.562
	mm				92	116	140	182	230	273	300	344.5
	in.	140						7.001	8.750	10.500	11.500	13.124
	mm							178	222	267	292	333
	in.	160	2.125	2.624	3.438	4.313	5.187	6.875	8.500	10.126	11.188	12.812
	mm		54	66.5	57	109.5	132	174.5	216	257	254	325.5
	in.	XXS	1.771	2.300	3.152	4.063	4.897	6.813				
	mm		45	58.5	80	103	124	173				

		Pipe Schedule No.	Named Pipe Size									
			18	20	22	24	25	28	30	32	34	36
A	in.	All	18.25	20.31	22.34	24.38	26.38	28.38	30.38	32.50	34.50	36.50
	mm		464	516	567.5	619	670	721	712	825.5	876	927
B	in.	10					25.376	27.376	29.376	31.376	33.376	35.736
	mm						644.5	695	746	797	848	898.5
	in.	20					25.00	27.000	29.000	31.000	33.000	35.000
	mm						635	686	736.5	787.5	838	889
	in.	STD	17 250	19.250	21.250	23.250						
	mm		438	489	540	590.5						
	in.	XS	1 7.000	19.000	21.000	23.000						
	mm		432	482.5	533.5	584						
	in.	30				22.876		26.750	28.750	30.750	32.75	34.750
	mm					581		679.5	730	781	832	883
	in.	4O	16.876	18.812		22.624				30.624	32.624	34.500
	mm		428.5	478		574.5				777.85	828.65	876.30
	in.	60	16.500	18.376	20.250	22.062						
	mm		419	46.7	514	560						
	in.	80	16.124	17.938	19.750	21.562						
	mm		409.5	455.5	501.5	548						
	in.	100	15.688	17.438	9.250	20.938						
	mm		398.5	443	489	532						
	in.	120	15.250	17.000	18.750	20.376						
	mm		387	432	476	517.5						
	in.	140	14.876	16.500	18.250	19.876						
	mm		378	419	463.50	505						
	in.	160	14.438	16 062	17.750	19.312						
	mm		367	408	451	490.5						

Notes (1) internal surface may be as-formed or machined or dimension B at root face.
Contour within the envelope shall be in accordance with falling table.

Materials

ASTM Code	Chemical Compositions %										Mechanicl Properties				Hardnes
	C	Mn	P	S	Si	Cr	Mo	Ni	Cu	V	Tensile MPb	Yield MPa %	Elon-Gation %	Reduce Area %	Brinell (HB)
	max.	max.	max.	max.	max.	max.	max.	max.	max.	max.	min	min	min	min	max.
A105	0.35	1.05	0.035	0.040	0.35	0.30	0.12	0.40	0.40	0.05	485	250	30	30	187
A216 WCB	0.30	1.00	0.040	0.045	0.60	0.50	0.20	0.50	0.30	0.03	485	250	22	35	
A216 WCC	0.25	1.20	0.040	0.045	0.60	0.50	0.20	0.50	0.30	0.03	485	275	22	35	
A217 WC1	0.25	0.5-0.8	0.040	0.045	0.60		0.45-0.65		0.50		450	240	24	35	
A217 WC6	0.20	0.80	0.040	0.045	0.60	1.50	0.65		0.50		485	275	20	35	
A217 WC9	0.18	0.70	0.040	0.045	0.60	2.75	1.20		0.50		485	275	20	35	
A217 C5	0.20	0.70	0.040	0.045	0.75	6.50	0.65		0.50		620	415	18	35	
A217 CA15	0.15	1.00	0.040	0.040	1.50	14.00	0.50	1.00			620	450	18	30	
A351 CF8	0.08	1.50	0.040	0.040	2.00	21.00	0.50	11.00			485	205	35		
A351 CF8M	0.08	1.50	0.040	0.040	1.50	21.00	3.00	12.00			485	205	30		
A351 CF3	0.03	1.50	0.040	0.040	2.00	21.00	0.50	12.00			485	205	35		
A351 CF3M	0.03	1.50	0.040	0.040	1.50	21.00	3.00	13.00			485	205	30		
A351 CN7M	0.07	1.50	0.040	0.040	1.50	22.00	3.00	30.50	4.00		425	170	35		
A3 52 LCB	0.30	1.00	0.040	0.045	0.60	0.50	0.20	0.50	0.30	0.30	450	240	24	35	
A3 52 LCC	0.25	1.20	0.040	0.045	0.60	0.50	0.20	0.50	0.30	0.30	485	275	22	35	
A182 F6a	0.15	1.00	0.040	0.030	1.00	13.50		0.50			585	380	18	35	229
A182 F304	0.08	2.00	0.045	0.030	1.00	20.00		11.00			515	205	30	50	
A182 F316	0.08	2.00	0.045	0.030	1.00	18.00	3.00	14.00			515	205	30	50	
A182 F304L	0.035	2.00	0.045	0.030	1.00	20.00		13.00			485	170	30	50	
A182 F316L	0.035	2.00	0.045	0.030	1.00	18.00	3.00	15.00			485	170	30	50	
A276 410	0.15	1.00	0.040	0.030	1.00	13.50					690	550	15	45	
A276 420	0.15	1.00	0.040	0.030	1.00	14.00									241
AI93 B7	0.49	1.10	0.035	0.040	0.35	1.20	0.25				860	720	16	50	321
A193 B7M	0.49	1.10	0.035	0.040	0.35	1.20	0.25				690	550	18	50	235
A193 B8	0.08	2.00	0.045	0.030	1.00	20.00		10.50			515	205	30	50	223
A193 B8M	0.08	2.00	0.045	0.030	1.00	18.00	3.00	14.00			515	205	30	50	223
A194 2H	0.40	1.00	0.040	0.050	0.40										352
A1942HM	0.40	1.00	0.040	0.050	0.40										237
A320 L7	0.48	1.00	0.035	0.040	0.35	1.10	0.25				860	725	16	50	
A320 L7M	0.48	1.00	0.035	0.040	0.35	1.10	0.25				690	550	18	50	235
A194 8	0.08	2.00	0.045	0.03	1.00	20		10.50							300

S&W

TECHNICAL DATA

Abbreviations List

AISI	American Iron and Steel Institute
AL	Aluminium
ANSI	American National Standard Institute
API	American Petroleum Institute
ASME	American Society of Mechanical Engineers
ASTM	American Society for Testing Materials
AWS	American Welding Society
AWWA	American Water Works Association
BB	Bolted Bonnet
BC	Bolted Capor Bolted Cover
BR	Bronze
BS	British Standard
BSPP	British Standard Pipe Thread,Parallel
BSPT	British Standard Pipe Thread,Taper
BUNA	Nitrile Rubber
BW	Butt Welding Ends
CFM	Cubic Feet per Minute
CI	Cast Iron
CR	Chloroprene or Neoprene
CS	Carbon Steel
CWP	Cold Working Pressure
DIN	Deutschen Industrie Norm
DN	Diameter Nominal
EPDM	Ethylene Propylene Diene Monomer
EPT	Ethylene-Propylene Ter Polymer
FE	Flanged Ends
FEP	Fluorinated Ethylene Propylene
FF	Flat Face
Fig.No.	Figure Number
FIG	Flanged
FNPT	Female National Pipe Taper
FPM	Fluoroelastomer
FS	Forged Steel
GPM	Gallons per Minute
GR	Grade
HF	(Hard Face)Stellite Face
IBBM	Iron Body Bronze Mounted
IN	Inch
IPM	Inches per Minute
ISRS	Inside Screw Rising Stem
Max.	Maximum
MI	Malleable Iron
Min.	Minimum
MSS	Manufacturers Standardization Society
NACE	National Association of Corrosion Engineers
NBR	Nitrile or Buna N Rubber
NC	Normally Closed
NDT	Non Destructive Testing
Nod.CI	Nodular Cast Iron
NPS	Nominal Pipe Size
NPT	National Pipe Thread
NRS	Non Rising Stem
NYL	NyLon
OD	Outside Diameter
OS&Y	Outside Screw and Yoke
PCD	Pitch Circle Diameter
PE	Polyethylene
PMI	Positive Material Identification
PP	Polypropylene
PSI	Pounds Per Square Inch
PSIA	Pounds per Square Inch Absolute
PSIG	Pounds per Square Inch Gauge
PTFE	Poly Tetra Fluoro Ethylene
PVC	Polyvinyl Chloride
RF	Raised Face
Rilsan	Super Polyamide
RPM	Revolution per Minute
RS	Rising Stem
RTJ	Ring Type Joint
SAE	Society of Automotive Engineers
SB	Screw Bonnet
Scr	Screwed
SE	Screwed Ends
SJ	Scolder Ends
SS	Stainless Steel
STL	Stellite
SW	Socket Welding Ends
TFE	Tetra Fluoro Ethylene
VITON	Fluorinated Elastomer
WB	Welded Bonnet
WOG	Water, Oil, Gas
WP	Working Pressure

ORDERING GUIDE

P.34_35

8	GT	15	RF	J	5A	CR
size	1	2	3	4	5	6

8" Gate Valve 150# Class, RF Flange, 316 Stainless steel Body, Full Stellite, Cryogenic Service

1. Model

Chapter 1. Floating Ball Valves
Chapter 1-1. Side Entry Design
-One Piece Body (SWFS1)
-Two Piece Body (SWFS2)
-Three Piece Body (SWFS3)

Chapter 1-2. Top Entry Design
-One Piece Body (SWFS1)

Chapter 2. Trunnion Mounted Ball Valves
Chapter 2-1. Side Entry Design
-Two Piece Body (SWFS2)
-Three Piece Body (SWFS3)

Chapter 2-2. Top Entry Design
-One Piece Body (SWTT1)

2. Rating

12 : ASME Class 125
15 : ASME Class 150
30 : ASME Class 300
60 : ASME Class 600
90 : ASME Class 900
150 : ASME Class 1500
250 : ASME Class 2500

3. End Connection

W : WAFTER
L : LUG
RF : Rased Face Flange
RTJ : Ring Joint Type Flange
BW : Butt Weld End

4. Body

FIG	Material	Specification	FIG	Material	Specification
A	Carbon Steel	A216 WCB	N	Alloy 825	NS NO0825
B	Low Temp Carbon	A352 LCB	O	Alloy 625	A494 CW6MC
C	Low Temp Carbon	A352 LCC	P	Hastelloy C276	A494 CW12MW
D	5% Cr Steel	A217 C5	Q	Menel 400	A494 M351
E	9% Cr Steel	A217 C12	R	Nickel Al-Bz	B148 C95800
G	Low Temp 13Cr 4n	A352 CA6NM	S	Inconel 625	A494 CW6MC
H	410 Stainless Steel	A217 CA15	T	Duplex SS Gr. 1	A351 CD4MCu
I	304 Stainless Steel	A351 CF8	U	Duplex SS Gr. 2	A890 CE8MN
J	316 Stainless Steel	A351 CF8M	V	Duplex SS Gr. 3	A890 CD6MN
K	316L Stainless Steel	A351 CF3M	w	Duplex SS Gr. 4	A890 CD3MN
L	317 Stainless Steel	A352 CG8M	X	Duplex SS Gr. 5	A890 CE3MN
M	Alloy 20	A351 CN7M	Y	254SMO	A351 CK3MCuN
AA	Gray Iron	A126 CL.B	Z	904L SS	A351 CN2MCUN
AB	Ductile iron	A395	T1	Titanum Gr.2	B381 F2

5. Trim Material

Trim No.	Seat Ring	Ball or Surface	Stem	Trim No.	Seat Ring	Ball or Surface	Stem
50	PTFE	13Cr	13Cr	60	R-PTFE	13Cr	13Cr
51	PTFE	304S.S	304S.S	61	R-PTFE	304S.S	304S.S
52	PTFE	304L	304L	62	R-PTFE	316S.S	316S.S
53	PTFE	316S.S	316S.S	63	PEEK	304S.S	304S.S
54	PTFE	316L	316L	64	PEEK	316S.S	316S.S
55	PTFE	A105 + ENP	4140 + ENP	57	NYLON	13Cr	13Cr
56	PTFE	LF2 + ENP	316S.S	58	NYLON	304S.S	304S.S

6. Option

CR : Cryogenic Service
FS : Fire Safety
MO : Motor Operator
HO : Hydraulic Operator
PO : Pneumatic Operator
OX : Oxygen Service
SL : Special Lining
TF : Teflon Insert

BALL VALVE

Floating Ball Valves
Trunnion Mounted Ball Valves
Technical Data
Ordering Guide

S&W S&W IND. Co., Ltd.

Head Office
Factory
184-30, Cheonbuksandan-ro, Cheonbuk-myeon, Gyeongju-si,
Gyeongsangbuk-do, Korea
T. +82-54-772-6341 F. +82-54-772-1441 E-mail. ceo@snwvalves.com

Seoul Office
603-Ho, 1-Dong, 22-10, Hajeong-ro, Dongdaemun-gu, Seoul, Korea
T. +82-2-2138-6341 F. +82-2-2138-6342

Busan Factory
2504, Daejeo 2-dong, Gangseo-gu, Busan, Korea
T. +82-51-324-6341 F. +82-51-324-6347

Casting Foundry
150-4, Banjeong 2-ri, Bugan-myeon, Yeongcheon-si,
Gyeongsangbuk-do, Korea
T. +82-54-336-5546 F. +82-54-336-5549

www.snwvalves.com

1503SNW04 Designed by NITO. Print in KOREA MAR 2015. www.nito.co.kr